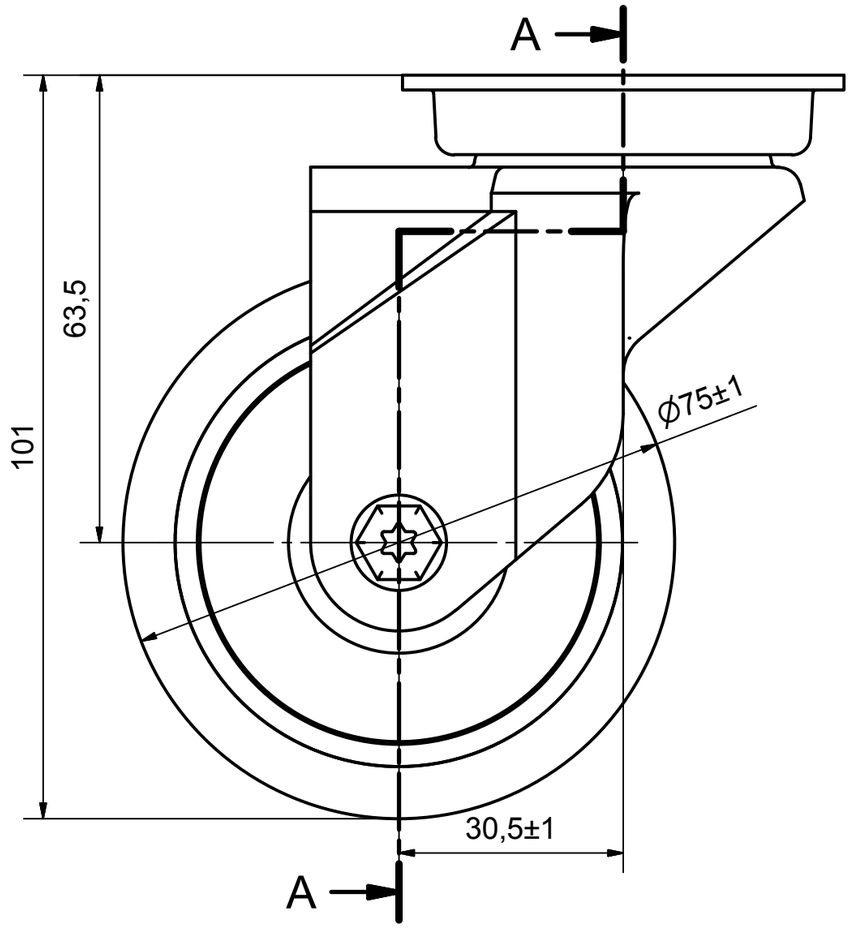

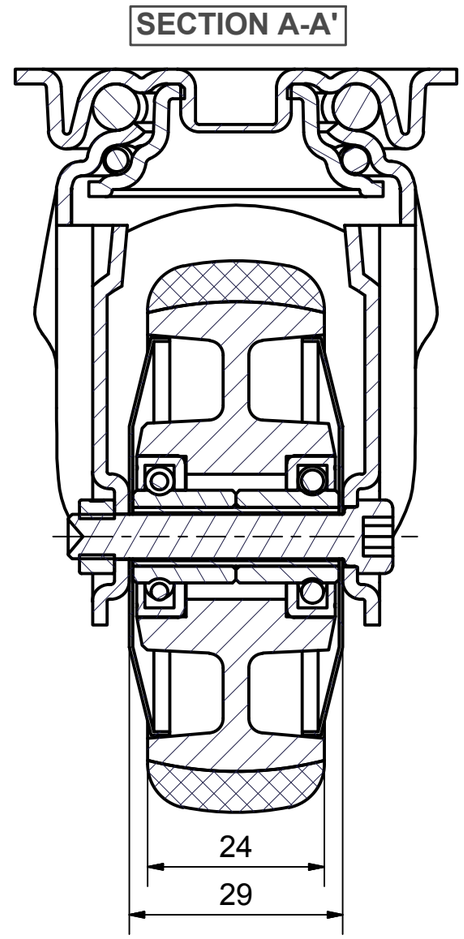

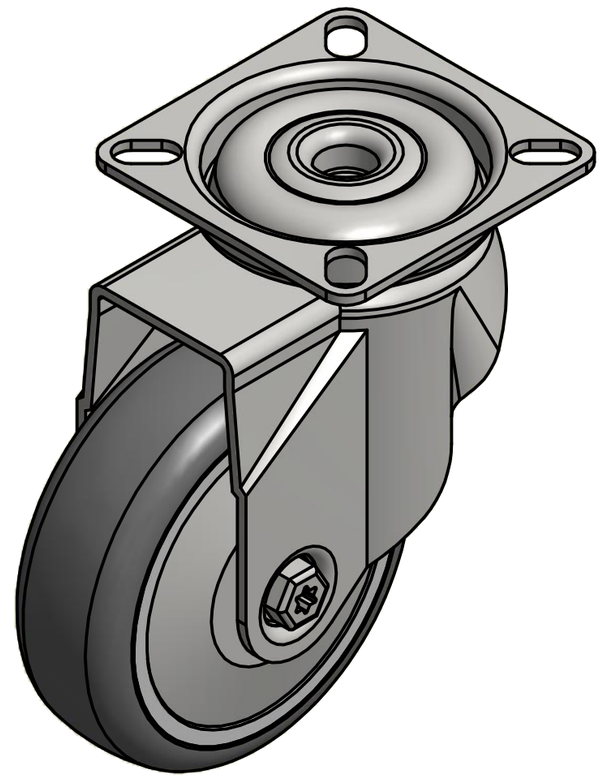

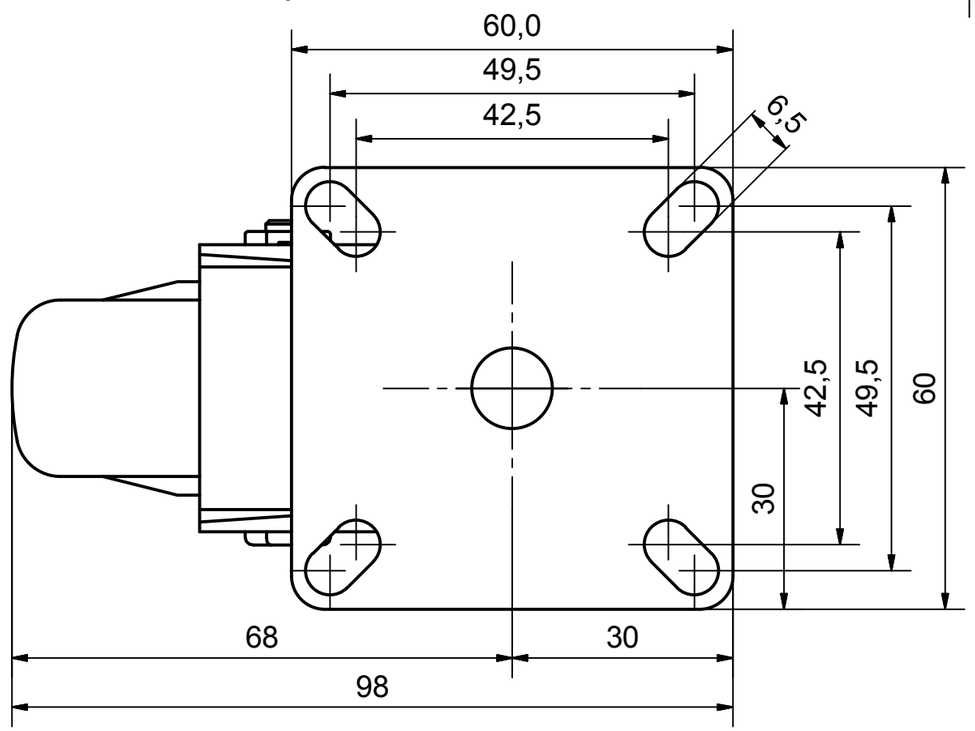

Load Capacity: 60kg, for speed up to 4km/h
(According to EN 12530)

roda s.a. THESSALONIKI - GREECE	PRODUCTION OF INSTITUTIONAL CASTORS AND WHEELS	PERMIS. VARIATIONS:	PART No:
			UNF . DIM.:
		SURFACE FINISH :	PART NAME : **M.075.TPC.TSG**
This drawing is the property of RODA S.A. It must neither be reproduced in any manner nor shall it be submitted to third parties or competitors without our written consent		DESIGNED 2/7/2013 E.POLIMEROPOULOU DRAWN 2/7/2013 E.POLIMEROPOULOU CHECKED 2/7/2013 H.SAATZOGLOU	PART DESCRIPTION : **Swivel castor, steel support, top plate fitting.Wheel 75x24mm,non marking grey rubber (82shA) double ball bearings,steel thread**
C3 B2 A1 A/A		QUANTITY REPLACE :	SCALE
			DRAWING NUMBER :
			SHEET No.
			GEN. DWG. NUM. :